## Technical drawing (FL-5)

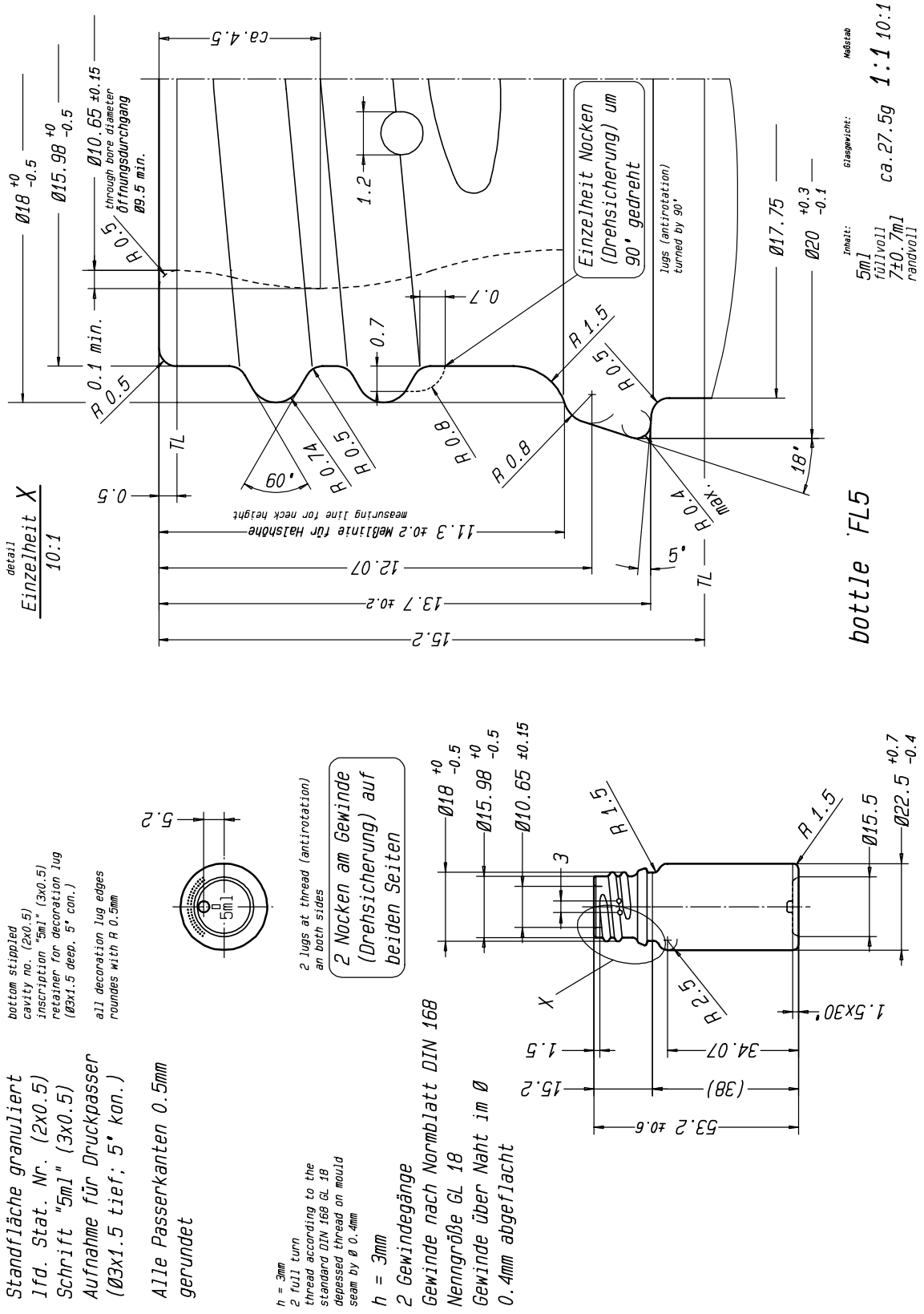


**MIRON Violetglass BV** – Stephensonstraat 57 – 7903 AS Hoogeveen – The Netherlands
P. +31 528 760060 – F. +31 528 760069 – E info@mironglass.com – W. www.mironglass.com